International Journal of GEOMATE, Jan., 2021, Vol.20, Issue 77, pp. 149-154
ISSN: 2186-2982 (P), 2186-2990 (O), Japan, DOI: https://doi.org/10.21660/2020.77.76739
Geotechnique, Construction Materials and Environment

AN EXPERIMENTAL STUDY OF DRAG COEFFICIENT FOR SMOOTH THIN CIRCULAR PLATES WITH CENTRAL HOLE

*Amjad Zeno[1], Motasem Darwish[1], Abeer Alee[2] and Aymen Awad[1]

[1]Faculty of Engineering, Middle East University, Jordan, Amman
[2]Faculty of Civil Engineering, Damascus University, Syria

*Corresponding Author, Received: 14 Sep. 2020, Revised: 28 Nov. 2020, Accepted: 12 Dec. 2020

ABSTRACT: The determination of the drag coefficient C_D for various bodies is essential in engineering design and applications. Therefore, this study investigated the relationship between the drag coefficient of smooth thin circular plate with central hole and the Reynolds number ($Re = \frac{V.D.\rho}{\mu}$) using an experimental approach. The experiments were conducted using a wind tunnel, which issued to simulate and produce a controlled stream of air. The stream of air's velocity and the central hole diameter were changed separately to characterize their relationship with the drag coefficient, which was measured using electronic semiconductor. In the experiments, 7 plates with different central hole diameter (d) to external plate diameter (D) ratio ($\beta = \frac{d}{D}$) between 0.2 and 0.8, incremented by 0.1 in each experiment, were employed to investigate the relationship between drag coefficient and the β ratio. In addition, the airstream velocity was increased from 5 m/sec to 25 m/sec, incremented by 1 m/sec, to investigate the relationship between drag coefficient and Reynolds number. The results indicated that the relationship between drag coefficient and Reynolds number across the investigated plates consists of three phases. Initially, the drag coefficient value declines when increasing Reynolds Number up to $Re=5\times10^4$. Thereafter, the drag coefficient increases noticeably with Reynolds number, up to $Re=1\times10^5$. Finally, drag coefficient remains with no changes as the Reynolds Number increases beyond $Re>1\times10^5$. Furthermore, the experiments showed that the drag coefficient decreases with increasing ratio β, especially for $\beta > 0.7$. These results could be implemented in various engineering, structural, and machinery designs to determine optimum drag coefficients.

Keywords: Drag Coefficient, Circular Plate, Reynolds Number, Central Hole, Wind Tunnel.

1. INTRODUCTION

Characterizing drag forces exerted on flowing fluids, is essential to achieve optimum designs in various engineering industries. Manipulating and reducing the drag forces would enhance automobiles and aircrafts fuel consumption, reduce emissions, and protect the environment [1]. Moreover, estimating drag forces is essential to determine safety and stability of building materials, towers, turbines, and hydraulic structures accurately [2]. Furthermore, the increasing investment in generating power using renewable engineering sources, and the implementation of renewable energy generating machines such as wind turbine and hydroelectric power stations, indicated the importance of characterizing flow structure. Therefore, various studies investigated drag forces, drag coefficient of different shapes, and their relation to flow structure [3-6], besides their implementation in engineering designs [1, 7].

Drag force, consists of two components: friction drag force (D_f) and pressure drag force, (D_p) [8]. It depends on fluid characteristics (i.e. fluid density and viscosity), body surface area, fluid velocity, and body drag coefficient. It is computed using the following formula:

$$F_D = \frac{1}{2}.\rho.V^2.A.C_D \quad \ldots\ldots\ldots\ldots\ldots\ldots\ldots\ldots (1)$$

Where F_D is the drag of force, ρ is the density of fluid, V is the velocity of fluid, A is the reference area of body, and C_D is the drag coefficient.

C_D is a dimensionless number that reflects all complex factors which affect the drag, and indicates the resistance of the fluid to moving bodies. It depends on various parameters such as body shape, Reynolds number (Re) and roughness (ε). However, determining the C_D analytically is challenging [9]. Therefore, the drag forces and the drag coefficient are determined through simulating and recreating fluid flow over an object, either by using computational fluid dynamics (CFD) or laboratory experiments (e.g. wind tunnels), which simulates real-world problems [6, 10]. Nevertheless, and despite the advancement in CFD, experimental simulations are indispensable to validate fluid dynamics models, understand complex structures, and characterize the drag coefficients of various shapes [11].

Therefore, various studies carried out experiments on regular and frequently used shapes (e.g. circular cylinders, rectangular cylinders, and circular plates) due to their simple geometry,

common use of similar shapes, and logical structure of their vortices [3].

Studies which investigated the relationship between drag coefficients and Reynolds number in circular sections reported an inverse relationship up to Reynolds number equals 2×10^5 [12, 13]. Butt and Egbers [14] investigated the aerodynamic characteristics of flow over circular cylinders with patterned surface, and reported that circular cylinders have a high drag coefficient due to pressure difference between upstream and downstream. Tsutsui and Igarashi [4], investigated drag coefficients of flow around a circular cylinder in air-stream when a circular rod is placed upstream, reported similar result, and indicated that a reduction up to 63% of drag forces in circular cylinders can be achieved by implementing a rod upstream of the circular cylinders. In addition, under optimum conditions, vortices are not generated due to rod existence, whereas the shear layer from the rod reattaches on the front face of the circular cylinder [4].

Moreover, Baracu and Grigoras-Benescu [9] analyzed the flow around circular cylindrical bodies, and reported that for flow with $Re < 2\times10^5$, C_D depends on both forms: pressure drag force and skin friction drag force. Furthermore, Baracu and Grigoras-Benescu (2011) confirmed the inverse relationship between C_D and Reynolds number up to Re equals 2×10^5, however, Baracu and Grigoras-Benescu [9] reported that for flow with $Re > 2\times10^5$, most of the drag is based on shear force, which affects the attached boundary layer and transfers it to a turbulent state. This transfer causes a significant drop in the drag coefficient. Nevertheless, a proportionally increasing relationship occurs for flow with higher Reynolds number [9].

Recently, Mallick, Kumar [5] evaluated the C_D measurements of various diameter circular cylinders using two different methods (i.e. direct weighing method, and pressure distribution around the cylinder), and reported that drag forces increase proportionally with cylinder diameter. Furthermore, for a cylinder of a specific diameter, increasing air velocity would lead to a higher drag force value [5].

However, few studies investigated plates with central holes, [15-17], while none investigated their C_D variation with Reynolds number. Plates with circular sections could have various applications in mechanical machines and steel structures, thus characterizing the C_D variation would enhance our understanding of their characteristics.

In this research, we investigated the relationship between drag coefficient of flow through smooth circular plates with central hole and a wide range of Reynolds number. A subsonic open wind tunnel, and various circular plates with different central hole diameters were employed to simulate air flow and determine the drag coefficients. The article is structured as follows: the experimental setup and description of used wind tunnel and plates in Section 2, the experiments results in Section 3, the results in Section 4, besides discussion and conclusion in Section 5.

2. EXPERIMENTAL SETUP

2.1 Wind Tunnel

The experiment was conducted in the hydraulic laboratory at the faculty of civil engineering, Damascus University using a subsonic open wind tunnel system, which simulates the aerodynamic flow structure over investigated bodies (Figure 1).

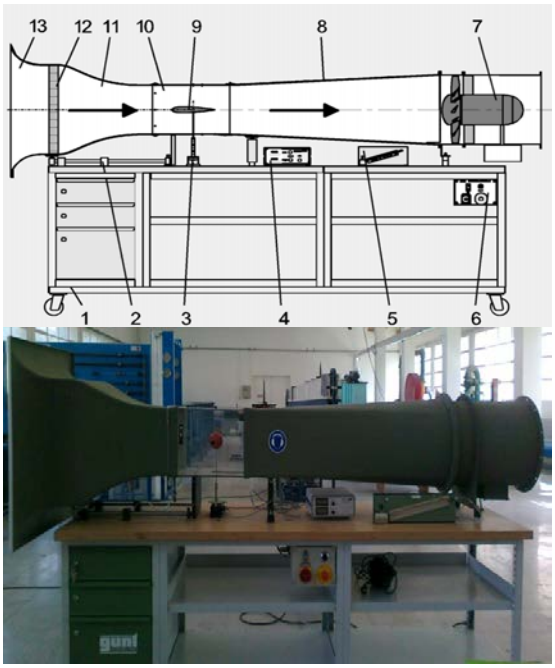

Fig.1. A schematic sketch showing the details of open air sub-sonic wind tunnel circuit.

Figure 1 represents the schematic diagram detailing as following: 1. laboratory trolley, 2. guide rail for adjustable nozzle, 3. electronic force transducer, 4. measuring amplifier for force transducer, 5. slanted tube manometer, 6. switch box, 7. axial fan, 8. diffuser, 9. measurement object, 10. Measurement section, 11. Nozzle, 12. Flow rectifier, 13. Inlet hopper

During the experiment, the model under consideration (i.e. smooth circular plate with central hole) was kept stationary constant, while the surrounding fluid (i.e. air) was set in motion, which generated the flow around the investigated body. In the air tunnel, the air was sucked in from the surrounding atmosphere, accelerated, passed over the body inside the measuring section, and then pumped out to the atmosphere again. The used

tunnel basic dimensions are (2.86 m) length, (0.86 m) width, (1.7 m) height, and it weighs (250 kg). In addition, the square transparent measuring chamber dimensions are (0.292 m ×0.292 m), and it was designed to ensure both: uniform velocity distribution and maximum mean flow velocity equals to 28 m/sec.

2.2 Plates Description

The experiment was conducted using various smooth plates (Figure 2) with an external diameter (D) of 8 cm, thickness of 1 mm, and a central hole diameter (d) ranging from 1.6 cm up to 5.6 cm as detailed in Table 1. The plates hole diameters equal 1.6 cm, 2.4 cm, 3.2 cm, 4.0 cm, 4.8 cm and 5.6 cm, while the central hole diameter to plate diameter ratios ($\beta = \frac{d}{D}$) equal 0.2, 0.3, 0.4, 0.5, 0.6, 0.7 and 0.8 respectively.

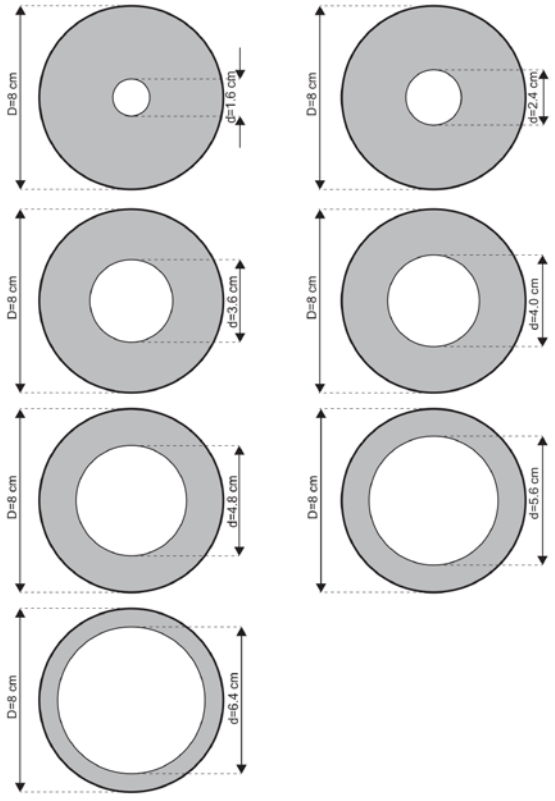

Fig.2. A schematic diagram of the plates used in the experiment.

Table 1 shows the dimensions of the circular plates with central hole. The plate's outer diameter (D) is 8.0 cm, while the inner diameter ranges from 1.6 cm to 6.4 cm. The inner diameter to the outer diameter ratio (β) ranges from 0.2 to 0.8, respectively.

Table 1: The dimensions of the circular plates with central hole used to investigate the drag force.

NO Plate	D (cm)	d (cm)	β
1	8	1.6	0.2
2	8	2.4	0.3
3	8	3.2	0.4
4	8	4.0	0.5
5	8	4.8	0.6
6	8	5.6	0.7
7	8	6.4	0.8

3. METHODOLOGY OF CONDUCTING EXPERIMENT

A series of experiments were performed using a subsonic open wind tunnel in the hydraulic laboratory at the faculty of civil engineering at Damascus University, to determine the drag coefficient of flow over smooth circular plates with central hole. During the experiments on each plate, the velocity of moving air was increased from 5 m/sec to 25 m/sec, incremented by 1 m/sec. Accordingly, Reynolds number around circular plates ($Re = \frac{V.D.\rho}{\mu}$) was changed 21 times from 2.6×10^4 at V=5 m/sec to 1.32×10^5 at v=25 m/sec. The drag force around each circular plate was measured by a semi-conductor force sensor, and displayed digitally on the measurement amplifier. The total number of experiments was 147 (7 plate × 21 Reynolds Number). The drag coefficient was calculated from the relationship:

$$C_D = 2.F_D/(\rho.V^2.A) \quad \text{.....(2)}$$

where $A = \pi.\frac{D^2}{4}$. The experiments were conducted at a temperature of 20 °C in the laboratory. The physical properties of air were adopted in the calculation Reynolds Number as follows: the density ρ=1.204 kg/m^3, and the dynamic viscosity $\mu=1.825\times10^{-5}$ kg/m.sec [18].

4. RESULTS

To determine the effect of Reynolds number and β ratio on the drag coefficient value, the relationship between Reynolds number and drag coefficient for the plates under consideration, which has various β ratios, was investigated and illustrated (Figure 3). The results indicate that, regardless of the plate β ratio, the relationship between drag coefficient and Reynolds number across the investigated plates consists of three phases. In the first phase, the drag coefficient value declines when increasing Reynolds Number up to $Re=5\times10^4$. Thereafter in the second phase, drag coefficient increases noticeably with Reynolds number, up to Reynolds number equals 1×10^5. In the third phase, there is no significant change in the value of the drag coefficient as the Reynolds Number increases beyond 1×10^5, and remains constant.

The relationships show that the minimum drag

coefficient value for each plate occurred at Reynolds Number of about Re≈5×10^4. Furthermore, the relationships indicate that the value of drag coefficient does not change significantly for Reynolds number greater than 1×10^5 (i.e. Re≥1×10^5)

In addition, the results indicated that increasing the B ratio would decrease the drag force, and flatten the curve. Therefore, the drag force for plates with high B ratio (i.e. $\beta \geq 0.6$), at any specified Reynolds number, is lower than the drag force with smaller B ratios (i.e. $\beta \geq 0.6$), while the lowest drag force occurs on the plate with the highest B ratio (i.e. $\beta = 0.8$).

Moreover, the relationship between the drag coefficient and β ratio were studied across all the investigated plates, as detailed in Figure 4, at four different Reynolds numbers: Re=2.64×10^4 (the lowest Reynolds Number, where the C_D were investigated at), Re=5×10^4 (where the lowest C_D value occurred), Re=1×10^5 (where the values of the drag coefficients starts to remains relatively constant) and finally at Re=1.32×10^5 (the largest values of the Reynolds number, where the C_D were investigated at). The results indicated that, the drag coefficient of any plate will decrease when increasing the β ratio. Moreover, the highest C_D occurs at the lowest Reynolds number (i.e. Re= 2.64×10^4), while the lowest C_D value occur at Re=5×10^4.

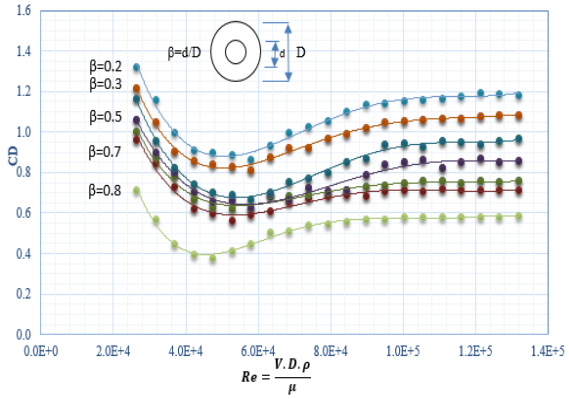

Fig.3. Drag coefficient C_D as a function of Reynolds Number with different values $\beta = \frac{d}{D}$ for a flat circular plate with central holes normal to the upstream flow

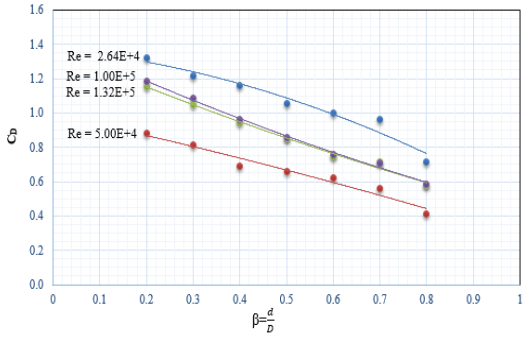

Fig.4. Drag coefficient C_D for the circular plates with central holes as a function of ratio $\boldsymbol{\beta = \frac{d}{D}}$ for different Reynolds Number

5. DISCUSSION AND CONCLUSION

The research investigated the relationship between drag coefficient and Reynolds number for circular plates with central holes. Drag force behavior around circular plates was simulated using a subsonic open wind tunnel system, and 7 plates with various central hole to plate diameter ratio (β) varying from 0.2 to 0.8, incremented by 0.1.

The results in Figure 3 indicate 3 phases for the relationship between C_D and Reynolds number. Initially, the C_D value decreases when Reynolds number increase from 2.64×10^4 up to 5×10^4. Afterwards, the C_D increases with Reynolds number up to an approximate Reynolds number of 1×10^5. Thereafter, the C_D values remain unchanged or vary slightly increased for Reynolds numbers greater than 1×10^5. This pattern is similar to the C_D relationship with Reynolds number in full circular sphere [19], however, the C_D values are noticeably higher in plates with central holes. This result might be attributed to the higher turbulence generated around the sphere, which leads to a wider wake layer, and higher drag force Moreover, the results in Figure 3 show an inverse relationship between the C_D and β ratio, where an increase in the β ratio would decrease the C_D value at any Reynolds number. This result is attributed to the low turbulence occurring in plates with high β ratio (i.e. plates with large inner diameter), which creates a thin wake layer, associated with small vortices and a low pressure zone on the downstream surface, leading to a lower drag force [9,19].

The research results indicated clearly that, regardless of the central hole diameter to plate diameter ratios (β), the drag force is significantly affected by the β ratio. Furthermore, the results illustrated that for any plate, the C_D is relatively constant for Reynolds numbers beyond 1×10^5. In addition, the results indicated similar C_D pattern between plates with central holes, and spheres, though a lower C_D value in the plates, due to the lower turbulence generated around the plates

surface, which highlights the important relationship between turbulence and C_D.

Thus, implementing plates to run at Reynolds number equals to $6x10^4$ or using a plate with a high central hole ratio to diameter (β) value, would reduce the drag force and produce comparable results. These results could be implemented in various engineering applications, designs, and guidelines, to achieve more efficient and economic designs.

6. ACKNOWLEDGMENTS

The authors are grateful to the Middle East University, Amman, Jordan for the financial support granted to cover the publication fee of this research article.

7. REFERENCES

[1] Mukut A.N.M.M.I. and M.Z. Abedin, Review on Aerodynamic Drag Reduction of Vehicles. International Journal of Engineering Materials and Manufacture, 2019. **4**(1): p. 1-14.
[2] Ostenfeld K.H. and A. Larsen, Bridge engineering and aerodynamics, in Aerodynamics of large bridges. 2017, Routledge. p. 3-22.
[3] Ahmed D.H., M. Haque, and M. Rauf, Investigation of Drag Coefficient at Subcritical and Critical Reynolds Number Region for Circular Cylinder with Helical Grooves. International Journal of Maritime Technology, 2017. 8: p. 25-33.
[4] Tsutsui T. and T. Igarashi, Drag reduction of a circular cylinder in an air-stream. Journal of Wind Engineering and Industrial Aerodynamics, 2002. 90(4-5): p. 527-541.
[5] Mallick M., et al., Study on drag coefficient for the flow past a cylinder. International Journal of Civil Engineering Research, 2014. 5(4): p. 301-306.
[6] Bhagat K.C., S.K. Soren, and S.K. Chaudhary, EXPERIMENTAL AND NUMERICAL ANALYSIS OF DIFFERENT AERODYNAMIC PROPERTIES OF CIRCULAR CYLINDER. 2016.
[7] Gilliéron A.K.a.P., Impact of the automotive aerodynamic control on the economic issues. Journal of Applied Fluid Mechanics, 2009. 2(2): p. 69-75.
[8] Munson B.R., Fundamentals of Fluid Mechanics. 2010: Wiley India Pvt. Limited.
[9] Baracu T. and S. Grigoras-Benescu, Computational analysis of the flow around a cylinder and of the drag force. 2011.
[10] Tom Blackmore, William M. J. Batten, Gerald U. Muller and AbuBakr S. Bahaj. Influence of turbulence on the drag of solid discs and turbine simulators in a water current. Experiments in fluids, 2014. 55(1): p. 1637.
[11] Giancarlo Bruschi, Tomoko Nishioka, Kevin Tsang and Rick Wang., A Comparison of Analytical Methods Drag Coefficient of a Cylinder. Mechanical and Aerospace Engineering (MAE), University of California, Los Angeles, CA, 2003.
[12] Roshko A., Experiments on the flow past a circular cylinder at very high Reynolds number. Journal of fluid mechanics, 1961. 10(3): p. 345-356.
[13] Zdravkovich M.M. and Z. Mm, A critical remark on use of drag coefficient at low Reynolds numbers. 1979.
[14] Butt U. and C. Egbers, Aerodynamic characteristics of flow over circular cylinders with patterned surface. International Journal of Materials, Mechanics and Manufacturing, 2013. 1(2): p. 121.
[15] Kubota Y., M. Kosuda, and O. Mochizuki, Drag coefficient of a circular plate with holes in bubbly flow.
[16] Talley S. and G. Mungal, Flow around cactus-shaped cylinders. Center for Turbulence Research, Annual Research Briefs, 2002. 2002: p. 363-376.
[17] Demartino C. and F. Ricciardelli, Aerodynamics of nominally circular cylinders: A review of experimental results for Civil Engineering applications. Engineering Structures, 2017. 137: p. 76-114.
[18] Touloukin Y.S., Thermophysical Properties of Matter, Vol. 3: Thermal Conductivity, Gasses. IFI/Plenum New York, 1979: p. 512.
[19] NASA Drag of sphere. 2015 05/05/2015 [cited 2020 29/04]; Available from: https://www.grc.nasa.gov/www/k-12/airplane/dragsphere.html.

Copyright © Int. J. of GEOMATE. All rights reserved, including the making of copies unless permission is obtained from the copyright proprietors.

***The following figures are similar to Figure 3 and Figure 4 in the manuscript. However, we added them here to make it clearer for the esteemed reviewers and facilitate interpreting the results.**

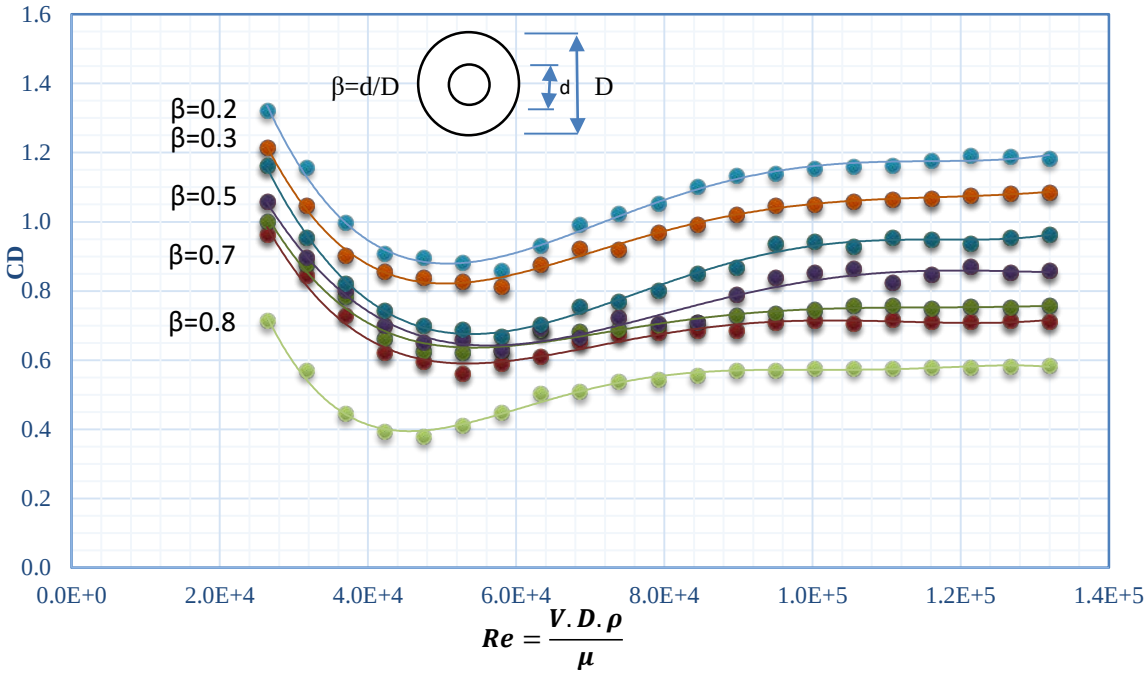

Fig.**3**. Drag coefficient C_D as a function of Reynolds Number with different values $\beta = \frac{d}{D}$ for a flat circular plate with holes normal to the upstream flow

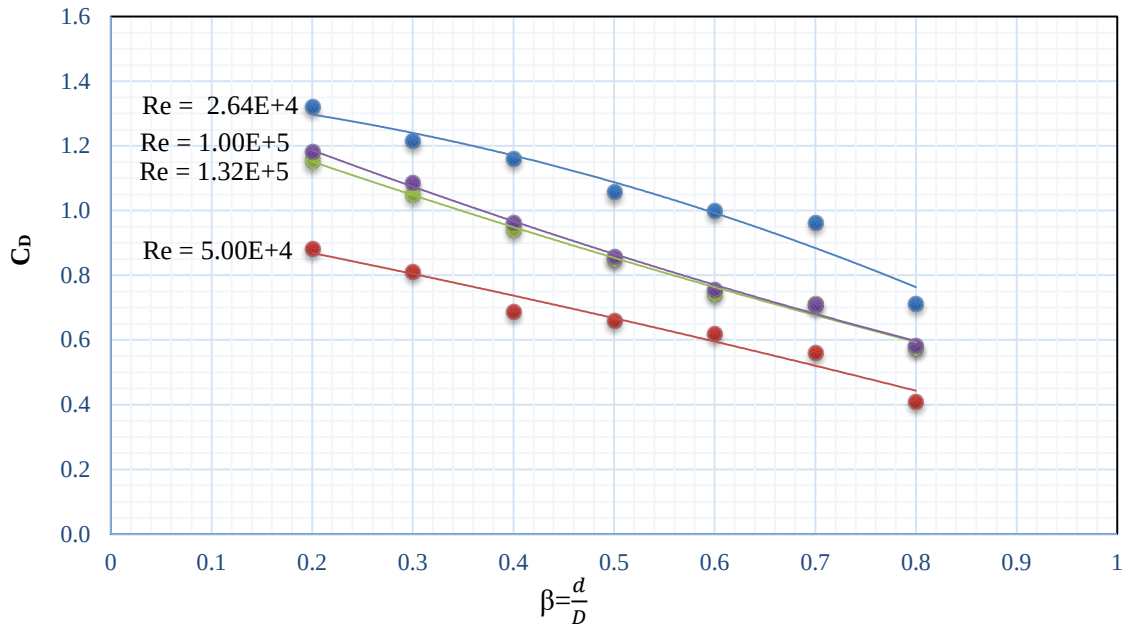

Fig.**4**. Drag coefficient C_D as a function of ratio $\boldsymbol{\beta = \frac{d}{D}}$ for different Reynolds Number